TC15P

series



Product Segments

- **Ergo Motion**

TC15P is an upgraded control box for the 2-leg height adjustable desk. The TC15P has an additional port for an external battery, which gives mobility to your sit-stand desk. In addition, the TC15P has integrated t-touch and built-in Bluetooth options that protect your desk from material damage and enable the desk to be operated via our mobile desk app.

With advanced PCB, the TC15P makes it possible to add a USB or wireless charging device onto the system. This new generation TiMOTION control box makes 0.1W low standby power standard. With the TC15P, you can easily utilize all the features you want for your sit-stand desk.

General Features

Number of motors	2
Max. output	32V DC, 12A
Back-up battery	External battery
Options	Support t-touch/Bluetooth built-in and charging accessory
Built-in transformer type	SMPS
Plug support	EU, USA, AUS, UK, or JPN
Color	Black
Operational temperature range	+5°C~+45°C

0.1 or 0.5W standby power consumption

Compact design for height adjustable desks

Drawing

Standard Dimensions
(mm)

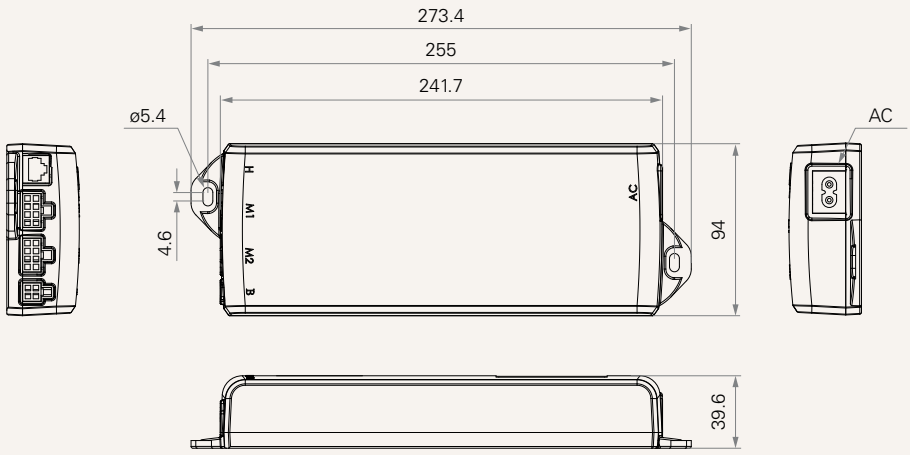

TC15P Ordering Key

TiMOTION

TC15P

Version: 20260326-J

	Transformer	8 = SPM-73Q (32V/2.5A, 0.5W standby power, quick start, 100-240V) L = SPM-73QC (32V/2.5A, 0.1W standby power, quick start, 100-240V) K = SPM-120QC (32V/4.0A + 5V/100mA, 0.1W standby power, quick start, 100-240V) S = SPM-120Q (32V/4.0A, 0.5W standby power, quick start, 100-240V) H = SPM-350L (10A, 0.1W Stand by,100~132V) J = SPM-350H (10A, 0.1W Stand by,195~264V) U = SPM-58E (29V/2.0A, 0.15W stand by, 100-240V) W = SPM-400H (12A, 0.1W stand by, 195~264V) Y = SPM-400L (12A, 0.1W stand by, 100-132V)		
	Plug	1 = EU 2 = US, SPT-2	3 = AU 4 = UK	5 = JP
	Color	1 = Black		
	Cable Length (mm)	1 = Straight, 1500	2 = Straight, 2000	3 = Straight, 4000
	Control Board	2 = With MCU 3 = With MCU, Bluetooth enabled		4 = With MCU, with t-touch 5 = With MCU, Bluetooth enabled, with t-touch

Terms of Use

The user is responsible for determining the suitability of TiMOTION products for a specific application.
TiMOTION products are subject to change without prior notice.